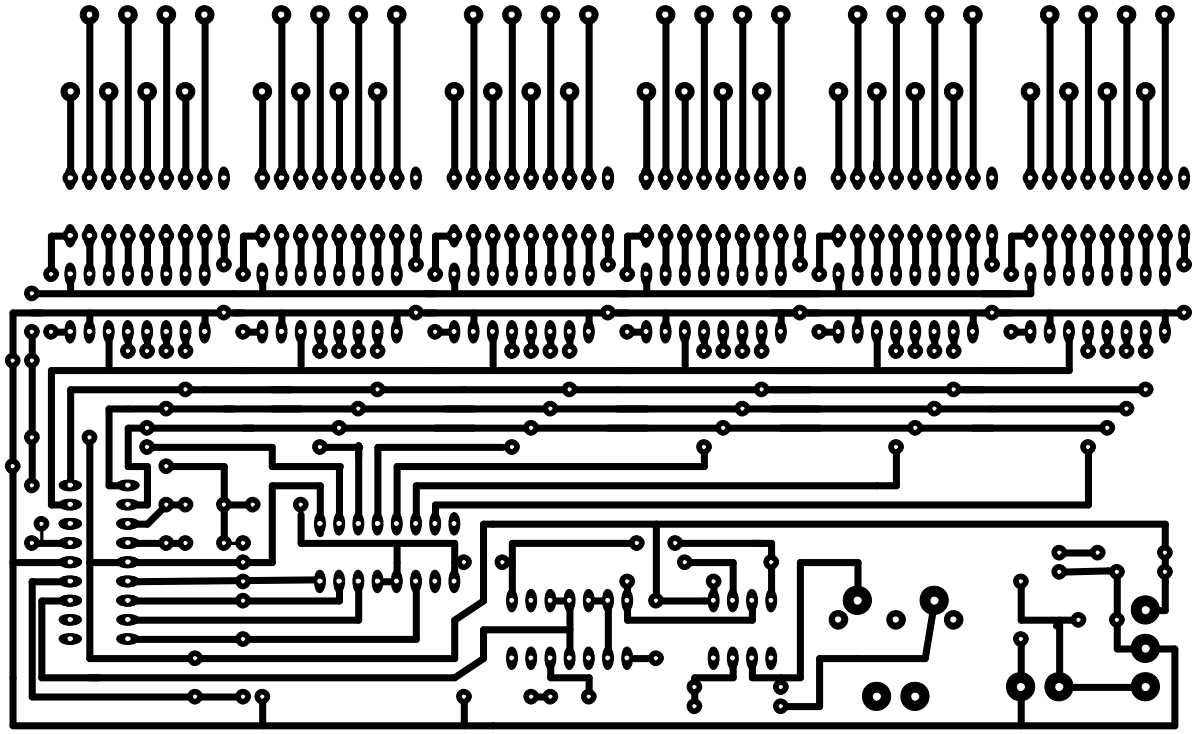File c:\pcb\mpar64.pcb, Version count 23, Print PCB Mask
Windows PCB Designer by Niche Software
Created 15:48 19 Nov 2012 (Last Saved at 10:09 28 Nov 2012)